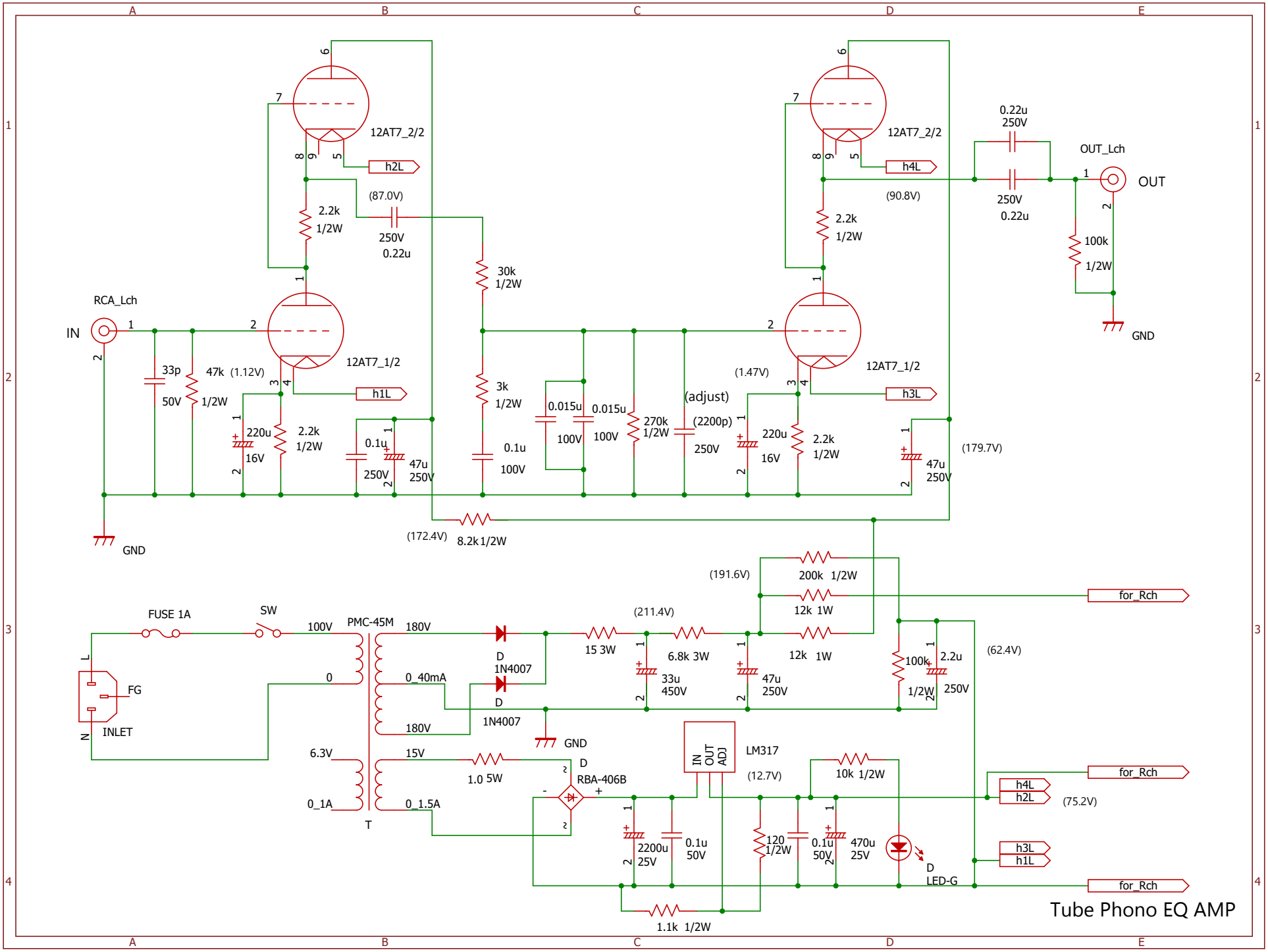
12AT7_2/2
h2L
(87.0V)
2.2k
1/2W
250V
0.22u
30k
1/2W
12AT7_2/2
h4L
(90.8V)
2.2k
1/2W
0.22u
250V
250V
0.22u
OUT_Lch
OUT
100k
1/2W
GND
RCA_Lch
IN
33p
50V
47k
1/2W
(1.12V)
12AT7_1/2
h1L
220u
16V
2.2k
1/2W
0.1u
250V
47u
250V
3k
1/2W
0.1u
100V
0.015u
100V
0.015u
100V
270k
1/2W
(adjust)
(2200p)
250V
(1.47V)
12AT7_1/2
h3L
220u
16V
2.2k
1/2W
47u
250V
(179.7V)
GND
(172.4V)
8.2k 1/2W
(191.6V)
200k 1/2W
12k 1W
for_Rch
FUSE 1A
SW
100V
PMC-45M
180V
D
1N4007
(211.4V)
15 3W
6.8k 3W
33u
450V
12k 1W
47u
250V
100k
1/2W
2.2u
250V
(62.4V)
L
FG
N
INLET
0
0_40mA
D
1N4007
180V
GND
6.3V
15V
1.0 5W
D
RBA-406B
0_1A
0_1.5A
T
IN
OUT
ADJ
LM317
(12.7V)
10k 1/2W
h4L
h2L
(75.2V)
for_Rch
2200u
25V
0.1u
50V
120
1/2W
0.1u
50V
470u
25V
D
LED-G
h3L
h1L
for_Rch
1.1k 1/2W
Tube Phono EQ AMP