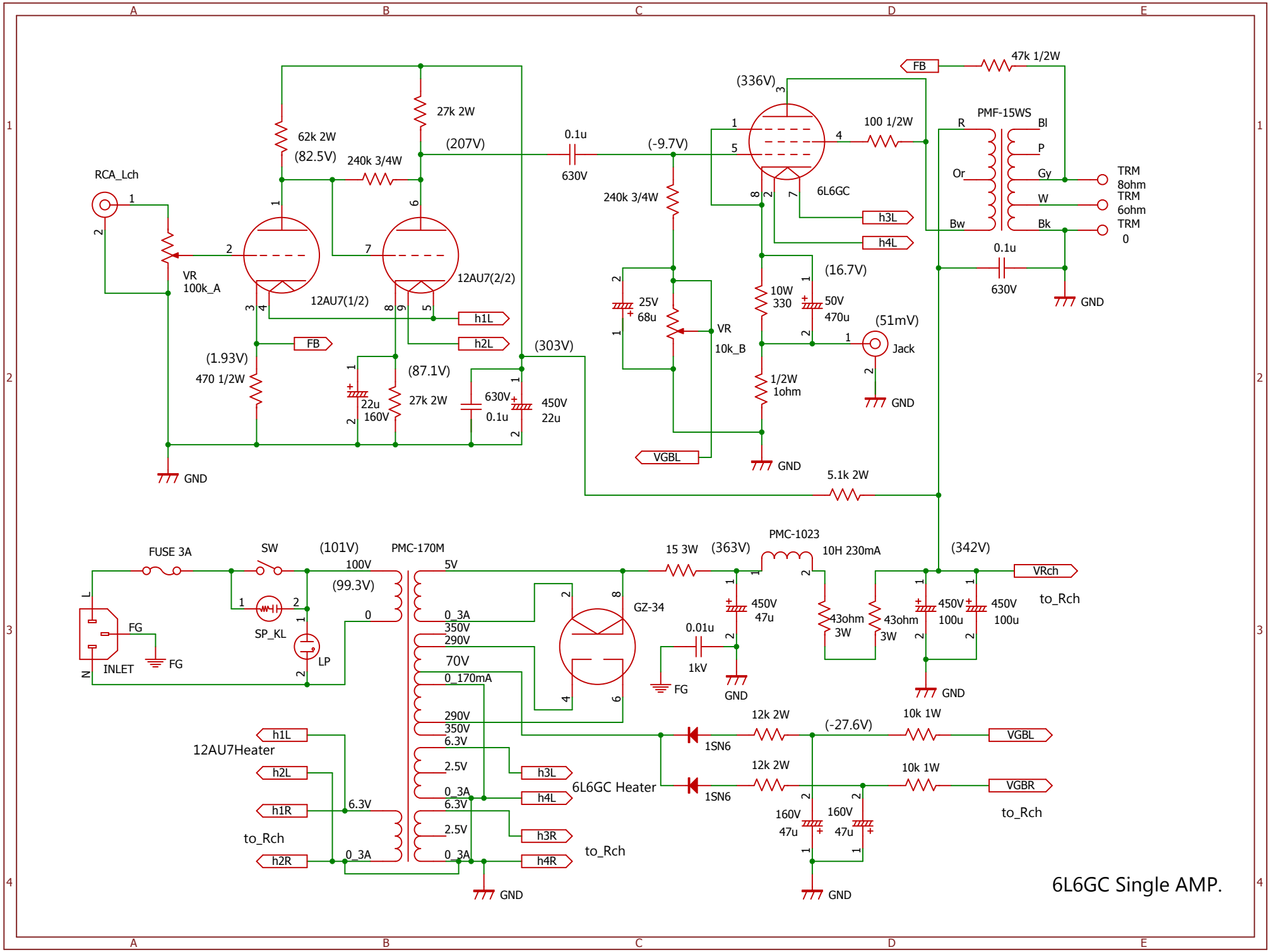
6L6GC Single AMP.
RCA_Lch
VR
100k_A
62k 2W
(82.5V)
240k 3/4W
27k 2W
(207V)
12AU7(1/2)
12AU7(2/2)
h1L
h2L
FB
(1.93V)
470 1/2W
(87.1V)
22u
160V
27k 2W
630V
0.1u
450V
22u
(303V)
GND
0.1u
630V
(-9.7V)
240k 3/4W
25V
68u
VR
10k_B
VGBL
(336V)
6L6GC
h3L
h4L
100 1/2W
10W
330
(16.7V)
50V
470u
(51mV)
Jack
1/2W
1ohm
GND
FB
47k 1/2W
PMF-15WS
R
Bl
P
Or
Gy
W
Bw
Bk
TRM
8ohm
TRM
6ohm
TRM
0
0.1u
630V
GND
5.1k 2W
FUSE 3A
SW
(101V)
PMC-170M
100V
(99.3V)
0
5V
0_3A
350V
290V
70V
0_170mA
290V
350V
6.3V
2.5V
0_3A
6.3V
2.5V
0_3A
SP_KL
LP
INLET
FG
FG
L
N
GZ-34
15 3W
(363V)
PMC-1023
10H 230mA
450V
47u
0.01u
1kV
FG
GND
43ohm
3W
43ohm
3W
(342V)
VRch
450V
100u
450V
100u
to_Rch
GND
h1L
12AU7Heater
h2L
h1R
to_Rch
h2R
6.3V
0_3A
h3L
h4L
6L6GC Heater
h3R
h4R
to_Rch
GND
12k 2W
1SN6
(-27.6V)
10k 1W
VGBL
12k 2W
1SN6
10k 1W
VGBR
160V
47u
160V
47u
to_Rch
GND