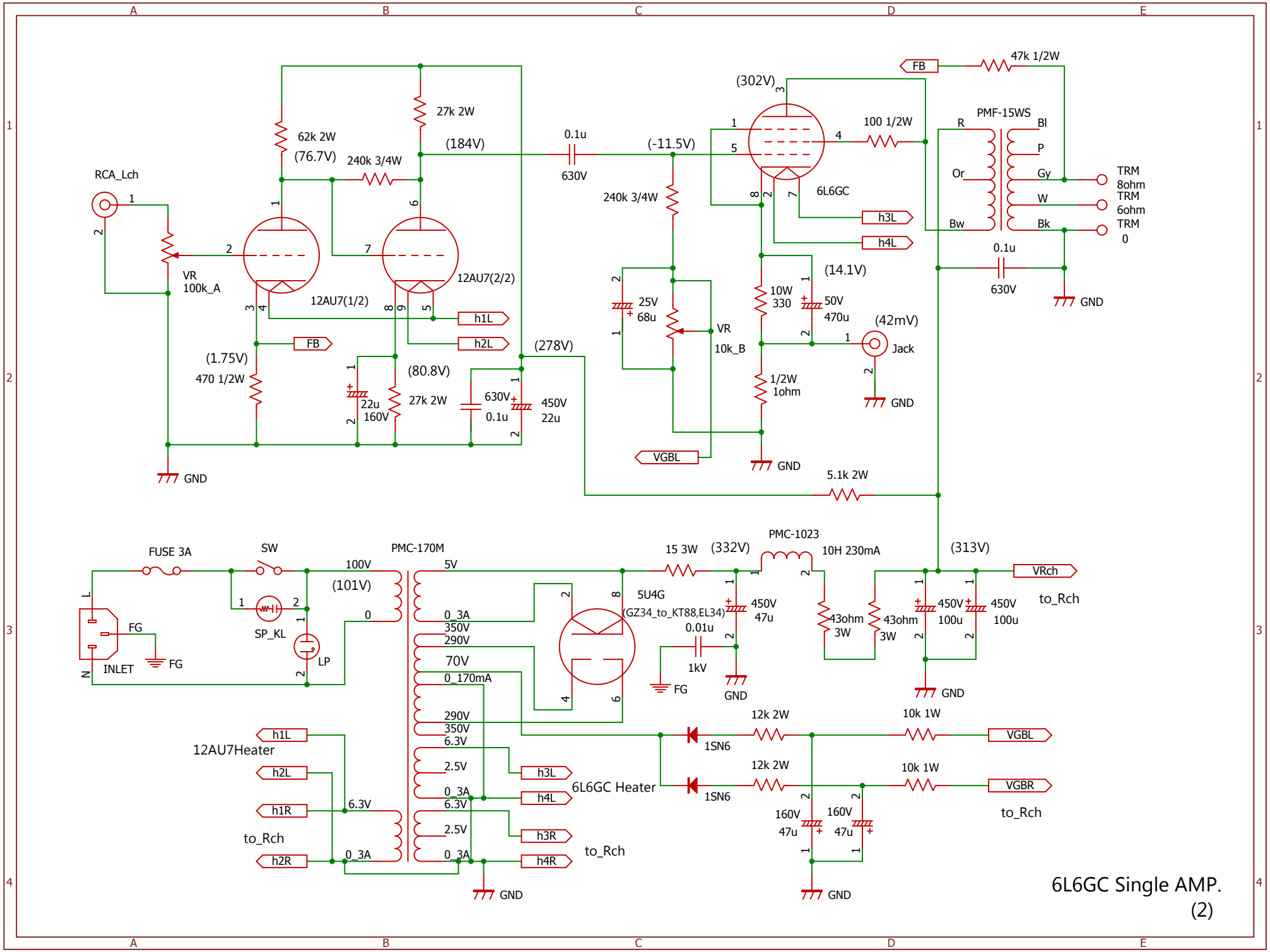
RCA_Lch
VR
100k_A
62k 2W
(76.7V)
240k 3/4W
27k 2W
(184V)
12AU7(1/2)
12AU7(2/2)
h1L
h2L
FB
(1.75V)
470 1/2W
(80.8V)
22u
160V
27k 2W
630V
0.1u
450V
22u
(278V)
GND
0.1u
630V
(-11.5V)
240k 3/4W
25V
68u
VR
10k_B
VGBL
(302V)
6L6GC
h3L
h4L
100 1/2W
10W
330
(14.1V)
50V
470u
(42mV)
Jack
1/2W
1ohm
GND
FB
47k 1/2W
PMF-15WS
R
Bl
P
Or
Gy
W
Bw
Bk
TRM
8ohm
TRM
6ohm
TRM
0
0.1u
630V
GND
5.1k 2W
FUSE 3A
SW
PMC-170M
100V
(101V)
5V
0_3A
350V
290V
70V
0_170mA
290V
350V
6.3V
2.5V
0_3A
6.3V
2.5V
0_3A
6.3V
0_3A
SP_KL
LP
INLET
FG
FG
L
N
h1L
h2L
h1R
h2R
12AU7Heater
to_Rch
h3L
h4L
h3R
h4R
6L6GC Heater
to_Rch
GND
15 3W
(332V)
PMC-1023
10H 230mA
5U4G
(GZ34_to_KT88,EL34)
450V
47u
0.01u
1kV
FG
GND
43ohm
3W
43ohm
3W
(313V)
VRch
450V
100u
450V
100u
to_Rch
GND
12k 2W
10k 1W
VGBL
1SN6
12k 2W
10k 1W
VGBR
1SN6
160V
47u
160V
47u
to_Rch
GND
6L6GC Single AMP.
(2)