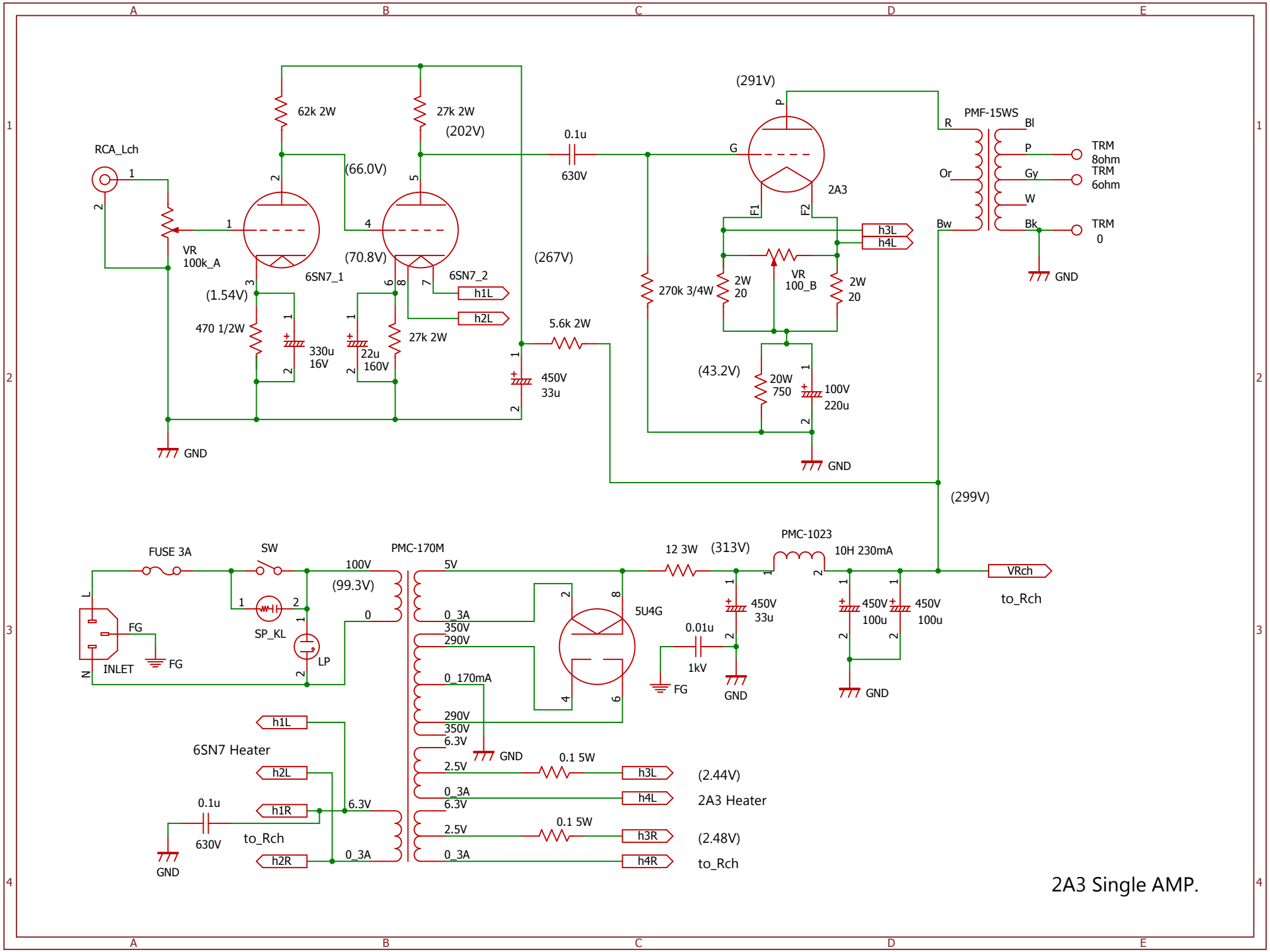
RCA_Lch
VR
100k_A
62k 2W
27k 2W
(202V)
(66.0V)
(70.8V)
(1.54V)
6SN7_1
6SN7_2
470 1/2W
330u
16V
22u
160V
27k 2W
h1L
h2L
GND
0.1u
630V
(267V)
5.6k 2W
450V
33u
(291V)
2A3
270k 3/4W
2W
20
VR
100_B
2W
20
h3L
h4L
(43.2V)
20W
750
100V
220u
PMF-15WS
R
Bl
P
Or
Gy
W
Bw
Bk
TRM
8ohm
TRM
6ohm
TRM
0
(299V)
FUSE 3A
SW
PMC-170M
100V
(99.3V)
0
5V
0_3A
350V
290V
0_170mA
290V
350V
6.3V
2.5V
0_3A
6.3V
2.5V
0_3A
SP_KL
LP
INLET
FG
5U4G
12 3W
(313V)
PMC-1023
10H 230mA
0.01u
1kV
450V
33u
450V
100u
450V
100u
VRch
to_Rch
6SN7 Heater
h1L
h2L
h1R
h2R
6.3V
0_3A
0.1u
630V
to_Rch
0.1 5W
h3L
(2.44V)
h4L
2A3 Heater
0.1 5W
h3R
(2.48V)
h4R
to_Rch
2A3 Single AMP.